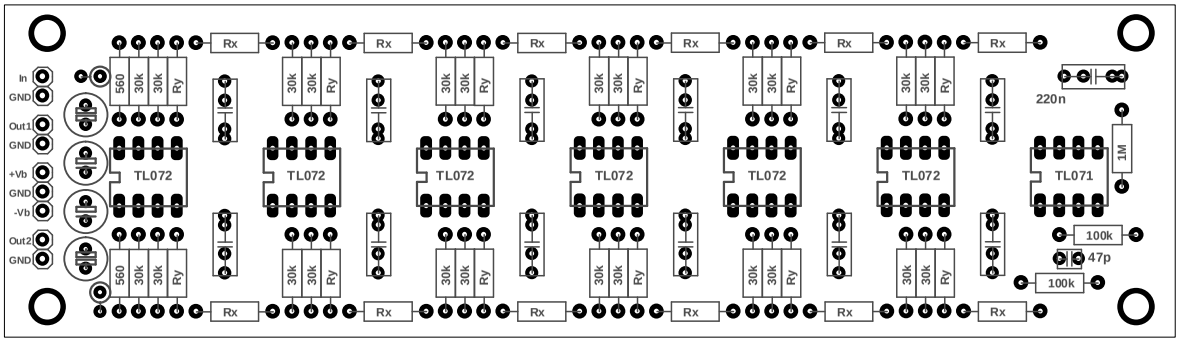
In
GND
Out1
GND
+Vb
GND
-Vb
Out2
GND
560
30k
30k
Ry
TL072
TL071
Rx
220n
1M
100k
47p
100k